InfiRay | www.infirayoutdoor.com

GENI LRF

Thermal Imaging Scope

User Manual

GL35R / GH50R

V1.0

IMPORTANT SAFETY INFORMATION

Environmental influences

Note: Never point the lens of the device directly at intense heat sources such as the sun or laser equipment. The objective lens and eyepiece can function as a burning glass and damage the interior components.

Risk of swallowing

Caution: Do not place this device in the hands of small children. Incorrect handling can cause small parts to come loose which may be swallowed.

Safety instructions for use

- Handle the device with care: rough handling may damage the battery.
- Do not expose the device to fire or high temperatures.
- The battery capacity decreases when operated in a cold ambient temperature. This is not a fault and occurs for technical reasons.
- Always store the device in a dry, well-ventilated space. For prolonged storage, remove the batteries.
- The recommended temperature for using this product is -20° to +50°. Otherwise, it will affect the service life of the product.
- Do not store the device for long periods at temperatures below 20°C or above 50°C, or this will permanently reduce the capacity of the battery.
- The product shall only be connected to a USB Type C interface.
- If the device has been damaged or the battery is defective, send the device to our after-sales service for repair.

User information on the disposal of electrical and electronic devices (private households)

2012/19/EU (WEEE directive): Products marked with this symbol cannot be disposed of as unsorted municipal waste in the European Union. For proper recycling, return this product to your local supplier upon the purchase of equivalent new equipment, or dispose of it at designated collection points. For more information see:

For business customers within the European Union

Please contact your dealer or supplier regarding the disposal of electrical and electronic devices. He will provide you with further information.

Information on disposal in other countries outside of the European

All rights reserved and shall not be copied and distributed in any form without written permission

Union

This symbol is only applicable in the European Union. Please contact your local authority or dealer if you wish to dispose of this product and ask for a disposal option.

Intended use

The device is intended for displaying heat signatures during nature observation, remote hunting observations and for civil use. This device is not a toy for children.

Use the device only as described in this instruction manual. The manufacturer and the dealer accept no liability for damages which arise due to non-intended or incorrect use.

Function test

- Before use, please ensure that your device has no visible damage.
- Test to see if the device displays a clear, undisturbed image.
- Check that the settings for the thermal imaging camera are correct.

Installing/removing the battery

The Geni LRF series thermal imaging scope need to install one 26650 battery for use. Refer to the section **Battery Installation** for details.

All rights reserved and shall not be copied and distributed in any form without written permission

1 Technical Specifications

Model	GL35R	GH50R
Detector Specifications		
Type	Vox	
Resolution, pixels	384 × 288	640 × 512
Pixel Size, um	12	
NETD, mk	≤ 35	
Frame Rate, Hz	50	
Optical Specifications		
Objective Lens, mm	F35 /1.0	F50 /1.1
Field of View, degrees	7.5 × 5.7	8.8 × 6.6
Linear Field of View, m at 100m	13 × 10	15 × 12
Magnification, ×	3 ~ 12	
Eye Relief, mm	40	48
Exit Pupil Diameter, mm	5	8
Diopter, D	-4 ~ +4	
Detection Range, m (Target size: 1.7mx0.5m, P(n)=99%)	1818	2597
Display Specifications		
Type	AMOLED	
Resolution, pixels	1024 × 768	
Power Supply		
Battery Type	26650 × 1	
Max. Operating Time (22 ºC), h★	7h	
External Power Supply	5V (Type C)	
Operational Characteristics		
Wi-Fi / APP	Support (InfiRay Outdoor)	
Photo / Video Recorder	Support	
MIC	Support	
IP Rating	IP67	
Memory Capacity, GB	32	
Operating Temperature, ºC	-20 ~ +50	
Weight, g	< 600g	< 700g
Dimension, mm	225 × 100 × 62	248 × 100 × 62
Connections and Compatibilities		
Max. Recoil Power on Rifled Weapon (Eo), Joules	6000g	
Max. Measuring Range, m/y★★	1000, ±1	

★ The actual operating time depends on the intensity of using Wi-Fi, video recorder.

➢ Improvements may be made to the design and software of this product to enhance its features without prior notice to the customer.

➢ The newest user manual can be downloaded at our official website:

All rights reserved and shall not be copied and distributed in any form without written permission

2 Package Contents

- Thermal Imaging Riflescopes
- IRM-030-205-Q1 picatinny mount
- Power adapter
- Data cable
- portable bag
- Lens cloth
- A L-shaped wrench
- M5 screw x 4pcs
- Heated target for zeroing x 5pcs

3 Description

The Geni LRF Series thermal imaging riflescope are designed for the use on hunting rifles booth in the nighttime and in the daylight in inclement weather conditions (rain, snow, fog or smog) to see through obstacles hindering detection of targets (tree branches, tallgrass and shrub etc.). Unlike the night vision devices, the Geni LRF Series do not require an external source of light and are not affected by strong lights. Geni LRF Series can be widely used in the night hunting, observation and terrain navigation, search and rescue operations etc.

4 Features

- 12μm high resolution thermal detector
- High image quality
- Maximum detection range 1818 / 2597m
- Build in Rangefinder: 1000m
- HD AMOLED display:1024*768
- High frame frequency: 50Hz
- Three save sort for rifle types
- Digital Zoom: ×1/×2/×3/×4
- Build-in 32GB storage, supports photographing and video recording
- Build-in Wi-Fi module, support **InfiRay Outdoor** App
- Variable reticle types and color
- Ultraclear mode
- User friendly interface

All rights reserved and shall not be copied and distributed in any form without written permission

5 Components and Controls

1. Eyeshade
2. Eyepiece adjustment ring
3. Lens cover
4. Down button / Photography button
5. Menu / M button
6. Up button / Zoom button
7. Power button
8. Type C port
9. Lens cap
10. Lens focus ring/knob
11. Laser rangefinder
12. Objective lens

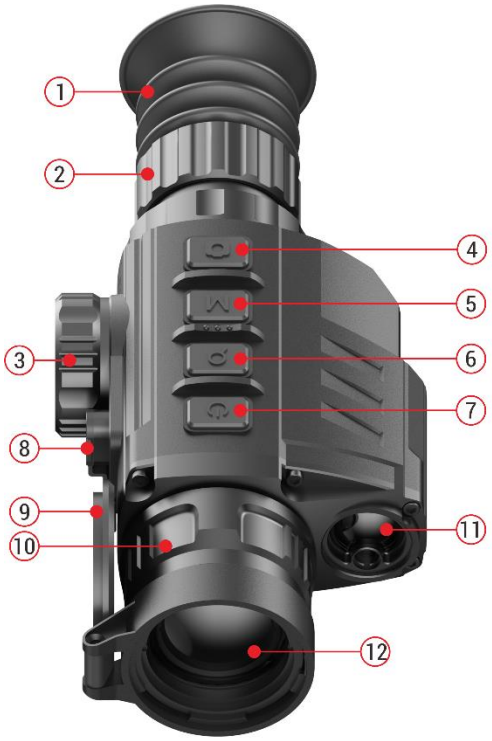

GL35R

GH50R

All rights reserved and shall not be copied and distributed in any form without written permission

6 Description of Controls

Button	Current Status	Short Press	Long Press
Power Button ⏻	Device is off	——	Power on the device
	Device is on	Standby the device	Power off
	Standby mode	Wake up the device	——
	Main menu	Exit to home screen	Power off
	Defective pixel calibration	Add / Delete defective pixel	Power off
Up / Zoom Button 🔍	Home screen	Digital Zoom	Enter the rangefinder mode
	Single rangefinder Mode	Distance measurement	Switch rangefinder mode
	Main menu / Quick menu	Navigation upwards	——
Menu Button M	Home screen	Enter quick menu	Enter main menu
	Quick menu	Switch and confirm parameters	Exit to the upper interface
	Main menu	Enter the submenu / Confirm selection	
	Defective pixel calibration	Confirm selection / Save position	
Down / Camera Button 📷	Home screen	Take a Photograph	Start video recording
	Main menu / Quick menu	Navigation downwards	——
	Video recording	Take a Photograph	Stop and save video
🔍 + 📷	Home screen	Calibrate the detector	Background correction
	Zeroing interface	——	Freeze the image
🔍 + M	Home screen	Turn the PIP function on/off	——
🔍 + M + 📷	Home screen	——	Turn reticle function on/off

All rights reserved and shall not be copied and distributed in any form without written permission

7 Battery Installation

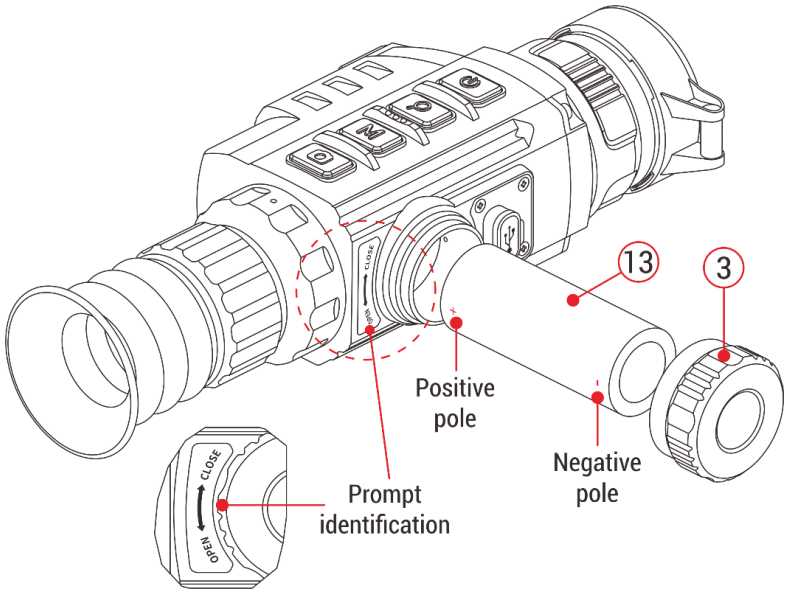

- Open the battery cover **(3)** anticlockwise according to the prompt identification on the device.
- Place one 26650 battery **(13)** correctly according to the polarity labels in the battery compartment.
- When done, screw tightly the battery cover **(3)** clockwise.
- Please use batteries provided by formal manufacturers.

8 External Power Supply

Geni LRF Series support external power supply, such as the mobile power bank (5V).

- Connect the external power supply to the USB port **(8)** on Geni LRF.
- The riflescope will switch to operation from external power supply, and the battery icon in the status bar will replaced by the USB icon ( ).

9 Operation

Installation of Rifle Mount

- Before using the Geni LRF Series, you need to install the Rifle Mount **(14)** on the bottom of your riflescope.
- The mounting holes **(17)** in the base of the riflescope enable the Mount **(14)** to be installed in one of the multiple positions.
- The choice of the mounting position helps the user to ensure the correct eye relief distance depend on the rifle type.
- Fix the Rifle Mount **(14)** to the base of the riflescope with a L-shaped

All rights reserved and shall not be copied and distributed in any form without written permission

wrench **(16)** and M5 screws **(15)** supplied in the package.

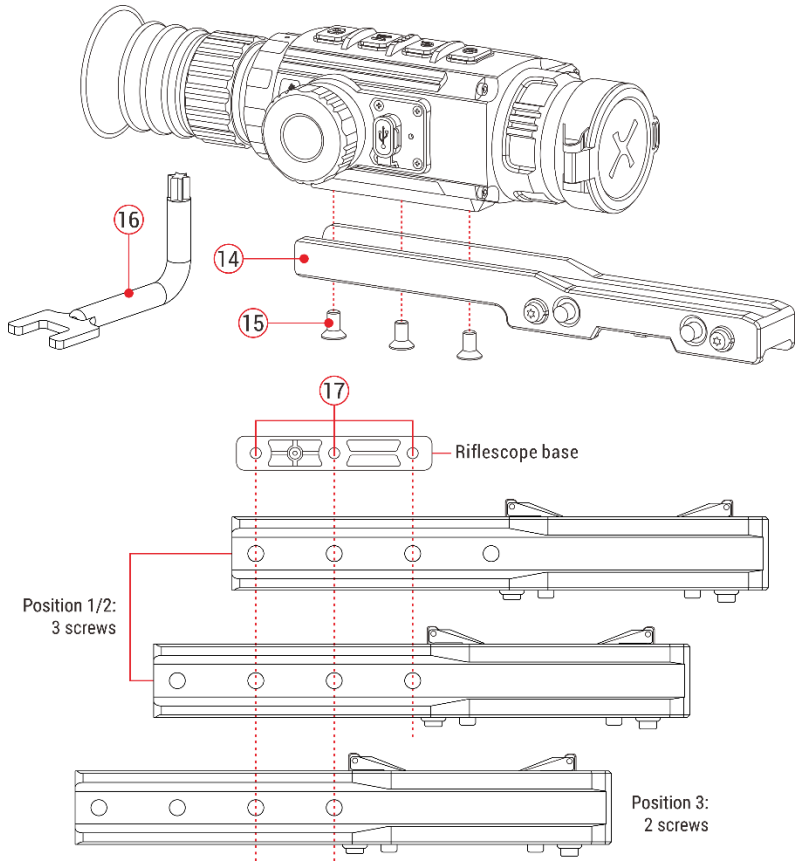

- Install the riflescope on your hunting weapon and make sure that the chosen position is suitable for you.
- Remove the riflescope from your weapon.
- Unscrew the screws one by one, apply some thread sealant onto the thread of screws and tighten them fully (do not overtighten). Let the sealant dry for a while.
- While the sealant is dry, the riflescope is ready to be installed on your weapon and to be zeroed.
- After first installation of the riflescope on your weapon. Please follow instructions in the Section 11 **"Zeroing"**.

Power On and Image Settings

- Open the lens cover **(9)**.
- Press and hold down the **Power button (7)** to turn on the scope.
- **Diopter Adjustment:** Rotate eyepiece diopter adjustment ring **(2)** until images in eyepiece are clear. After this, there is no need to rotate the eyepiece adjustment ring **(2)** for distance or any other conditions.
- **Lens Focus Adjustment:** Rotate the lens focus ring **(10)** to focus on the object being observed.
- **Image Settings:** To set up display brightness, image contrast, image modes and digital zoom, please refer to the **Quick Menu Function** section.
- **Standby Mode:** Briefly press the **Power button (7)** to turn the standby

All rights reserved and shall not be copied and distributed in any form without written permission

mode on/off.

- **Power Off:** After use, hold down the **Power button (7)** for about 3 seconds, there will be prompts of countdown of switch off. Release the button until a prompt of saving data appears on the screen after counting down from 3 to 0, and the device will switch off after saving data. **Please don't cut off power supply when saving data, otherwise the data may not be saved.**
- **Reticle On:** Long press the **Up (6) + M (5) + Down (4)** buttons at the same time for more than 7 seconds to active the hidden functions about reticle and zeroing functions. This function should be activated when the reticle first enabled.

10 Status Bar

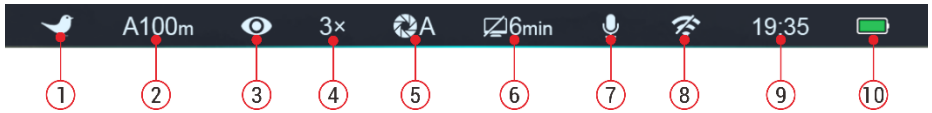

The status bar is at the top of the screen and shows information on the actual operating status of the riflescope, from left to right are:

1. Current image mode (: White Hot; : Black Hot; : Red Hot; : Target Highlight; : Pseudo color)
2. Actual zeroing type and distance (such as A100m)
3. Ultraclear mode (: Ultraclear off; : Ultraclear on)
4. Current magnification (such as 3.0×)
5. Calibration mode (a countdown timer 00:05 will appear instead of the calibration mode with 5 seconds remaining until automatic calibration). The timer will appear only after the microbolometer temperature has stabilized (after 10 minutes of continuous operation of the riflescope). Immediately after turning on the riflescope the shutter calibration activates automatically without displaying the timer.
6. Standby status and time
7. Microphone status (: Mic is off; : Mic is on)
8. Wi-Fi Status (: Wi-Fi off; : Wi-Fi on)
9. Clock (set clock in the App "InfiRay Outdoor" or the Main Menu)
10. Battery indicator

Icon	Color/Status	Battery Status
	Green	more than 40%
	Yellow	20% - 40%
	Red	Less than 20%, need to charge instantly
	USB icon	External power supply

All rights reserved and shall not be copied and distributed in any form without written permission

11 Zeroing

Geni LRF Series feature to use the “Freeze” zeroing method. Zeroing should be done at the operation temperatures by following the order of these steps:

- Mount your Geni LRF on your weapon according to the instructions of Section 9 **Installation of Rifle Mount.**
- When using the Geni LRF for the first time, press the **Up (6) + M (5) + Down (4)** three buttons at the same time for more than 7 seconds to active the hidden functions about reticle and zeroing functions.
- Set a target at a certain distance.
- Adjust the riflescope according to the instructions of section 9 **Power on and image settings.**
- Select the zeroing profile (refer to “Reticle - Zeroing Profile” in Main Menu).
- Press and hold down the **M (5)** button to enter the Main Menu.
- Briefly press the **Up (6) / Down (4)** button to select the **Zeroing** item. Then press **M (5)** button to enter the submenu.
- Base on the preset target distance to select zeroing distance in the zeroing submenu or add a new distance (refer to Main Menu option **Zeroing -** submenu **Zeroing Distance - Reset Zeroing Distance**).
- After setting the zeroing distance, select the Zeroing option (–¦–) and briefly press the **M (5)** button to enter Zeroing interface (see the Main Menu Option **Zeroing -** submenu **Zeroing Distance -** submenu **Zeroing**). The X and Y coordinates of the reticle are displayed in the upper left corner of the screen.
- Aim and shoot the target.
- Observe the location of impact. Suppose that the red cross hairs in the right picture represents the impact point, but the cross is only as a sign and does not appear on the actual interface.

- If the impact point does not match the aiming point (the center of the reticle), keep the reticle center the aiming point, then press and hold down the **UP (6) + Down (4)**

All rights reserved and shall not be copied and distributed in any form without written permission

buttons at the same time until a symbol of freeze ❄ appears on the left of the screen, and the image is frozen.

- Move the reticle with the **Up (6) / Down (4)** button until the reticle matches the point of impact.
- Briefly press the **M (5)** button to switch the movement direction between X (the default direction) and Y. The location of cursor ❯ represents the current selected option, and the icon turns into blue.
- Press the **Up (6)** button to move the reticle right or up and the **Down (4)** button to move the reticle left or down. Move one pixel with a short press, and move ten pixels with a long press.
- When moving the reticle, a white dot appears on the screen, representing the original position of the reticle.
- When the reticle moves to the impact point, press and hold the **M (5)** button to save the new position of the reticle and exit to the home screen.
- Repeat aiming and shooting, until the position of the point of impact is consistent with that of the aiming point.

Note: After the zeroing position is set up, you can switch the option through **Zeroing Distance** in the shortcut menu.

12 Calibration

When the image is degraded or uneven, it can be improved by calibration. Calibration can equalize the detector temperature and eliminate the image defects (such as vertical bars, phantom images, etc.).

There are three calibration modes: Automatic **(A)**, Manual **(M)** and Background **(B)**.

Select the required calibration mode in the Main Menu.

- **Automatic Calibration (A)**. Device will calibrate automatically according to the software algorithm. There is no need to close the lens cover (the internal shutter covers the sensor). Before automatic calibration, there will be a 5 second countdown prompt behind the shutter icon on the status bar, that can be to cancelled this calibration during countdown with a short press of the **Power (7)** button. In this mode, the riflescope may be calibrated by user with the **Up (6) + Down (4)** buttons.
- **Manual Calibration (M)**. On the home screen, press the **Up (6) + Down (4)** buttons briefly for manual shutter calibration without closing the lens cover (the internal shutter covers the sensor).

All rights reserved and shall not be copied and distributed in any form without written permission

- **Background Calibration (B).** On the home screen, close the lens cover and press **Up (6) + Down (4)** buttons briefly. A prompt appears on home screen as “Cover lens during calibration”, background calibration starts after 2s.

13 Digital Zoom

Geni LRF Series support to quickly increase the basic magnification by 2 times, 3 times or 4 times, as well as to return to the basic magnification.

- In the home screen, briefly press the **Up (6)** button to operate the incremental digital zoom in loop to switch magnification times. At the same time, the icon in the top status bar changes accordingly.

14 Photography and Video Recording

Geni LRF Series is equipped with a function for video recording and photography which is saved on the built-in 32GB memory storage.

The photo and video files are named with time, so it is suggested to reset the date and time in the Main Menu before using the photo and video functions (refers to **Main Menu - Settings - Date/Time Setting** in this manual) or to synchronize date and time in the InfiRay Outdoor application.

Photography

- Press the **Photography (4)** button in the home screen to take a photo.
- The image freezes for 0.5 sec with a camera icon appears on the upper left corner of screen.
- When the warning icon (!) appears beside the camera or video icon, it means the storage space is insufficient. Transfer the videos and images to other storage media in time to free up the memory space.
- Photos are stored in the built-in storage.

Video Recording

- In the home screen, press and hold down the **Photography (4)** button

All rights reserved and shall not be copied and distributed in any form without written permission

to start video recording.

- When the video recording starts, the icon and the video recording timer displayed in the HH:MM: SS (hour: minute: second) format will appear on the upper right of the screen.
- When recording, short press the **Photography (4)** button to take a photo.
- Press and hold down **Photography (4)** button to stop and save the video recording.
- All videos and photos will be saved in the build-in storage.

Note

- You can enter and work on the menu during video recording.
- Recorded photos and videos are saved in built-in memory card of the device in the format IMG_HHMMSS_XXX.jpg (for photos) and VID_HHMMSS_XXX.mp4 (for videos). HHMMSS - Hour/Minute/Second; XXX - three-digit counter (for videos and photos).
- The counter used for the names of multimedia files can't be reset.
- If a file is deleted from the list, its number is not taken by the other file.
- The maximum duration of a recorded video file is 10 minutes. After this time expires, the video is recorded to a new file automatically.
- The number of the recorded files is limited by the capacity of the built-in memory. It is recommended to check the available space frequently to avoid affecting the usage.
- Graphic data (status bar, icons and menu) in the recorded video and photo files are not displayed.

Memory Access

When the device is turned on and connected to a computer, it is recognized by the computer as a flash memory card, which is used to access the device's memory and make copies of pictures and videos.

- Turn on the riflescope and connect it with the computer via Type-C cable.
- Double click "my computer" on the desktop - double click to open the device named "InfiRay" - double click and open the device named 'Internal Storage' to access built-in memory.
- There are different folders named by time in the format of xxxx (year)

All rights reserved and shall not be copied and distributed in any form without written permission

xx (month) xx (day) in the memory in the storage.

- Recorded photos and videos in that day are saved in the folders
- Select desired files or folders to copy or delete.

15 Quick Menu Function

The basic settings (including image mode, display brightness, image sharpness and zeroing distance) can be changed in the Quick Menu.

- In the home screen, short press the **M (5)** button to enter the Quick Menu.
- Switch the function items as described below with a short press of **Up (6) / Down (4)** button. The selected items will be highlighted in background:

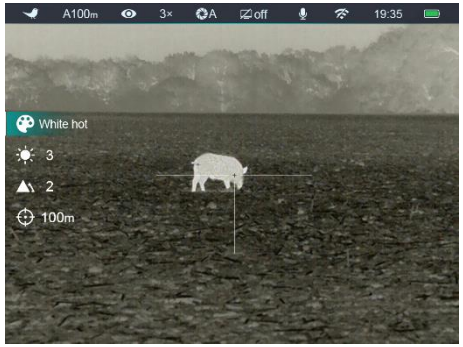

- **Image Mode ( )**: short press the **M (5)** button to switch image modes among White Hot, Black Hot, Red Hot, Pseudo Color and Target Highlighting mode.
- **Display Brightness ( )**: short press the **M (5)** button to change brightness level from 1 to 5.
- **Image Sharpness ( )**: short press the **M (5)** button to switch the image sharpness from 1 to 5.
- **Zeroing Distance ( )**: short press the **M (5)** button to change default zeroing distance under the current zeroing profile (if you select the profile A, you can only switch the distance saved in the profile A).

- Press and hold down the **M (5)** button to save modifications and exit the menu or wait 5 seconds to exit automatically.

16 Main Menu

- Enter the main menu with a long press of the **M (5)** button in home screen.
- Briefly press the **Up (6) / Down (4)** button to toggle between the main menu options.
- Main menu navigation is cyclical: as soon as the last menu option of the first tab is reached, the first menu option of the second tab starts.
- Adjust the current parameters or enter the submenus with a short

All rights reserved and shall not be copied and distributed in any form without written permission

press of the **M (5)** button.

- In all menu interfaces, long press the **M (5)** button to save the modification and exit to the home screen. And short press the **Power (7)** button to return to the previous menu without saving.
- Automatic exiting from the main menu to the home screen will occur after 15 seconds of inactivity.
- Upon exit from the main menu the cursor location is stored only for a single working session (i.e. until the riflescope is turned off). Upon restarting the riflescope and entering the menu the cursor will be on the first menu item.

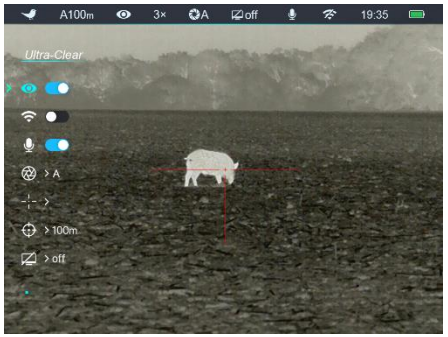

Main Menu Options and Descriptions

Ultraclear	**Turn Ultraclear mode on/off** ● Press and hold down the **M (5)** button to enter the Main Menu. ● Select the **Ultraclear** menu option with the **Up (6) / Down (4)** button. ● Turn Ultraclear mode on /off with a short press of **M (5)** button, along with the sound of shutter calibration. ● When the function is on/off, the icon in the status bar changes accordingly.
Wi-Fi	**Turn Wi-Fi on/off** ● Press and hold down the **M (5)** button to enter the Main Menu. ● Select the **Wi-Fi** menu option with the **Up (6) / Down (4)** button. ● Briefly press of the **M (5)** button to turn Wi-Fi on /off

All rights reserved and shall not be copied and distributed in any form without written permission

	● When the function is on/off, the icon in the status bar changes accordingly.
Microphone	**Turn Microphone on/off** ● Press and hold down the **M (5)** button to enter the Main Menu. ● Select the **Microphone** menu option with the **Up (6) / Down (4)** button. ● Briefly press of the **M (5)** button to turn microphone on/off. ● When the function is on/off, the icon in the status bar changes accordingly.
Calibration	**Select calibration mode** There are three calibration modes: Automatic(A), Manual (M) and Background (B). The selected calibration mode is displayed in the status bar (see **Status Bar** section). ● Press and hold down the **M (5)** button to enter the Main Menu. ● Select the **Calibration** menu option with the **Up (6) / Down (4)** button. ● Briefly press of the **M (5)** button to enter the submenu. ● Press **Up (6) / Down (4) button** to select one mode from the following modes: - **Automatic.** The software determines the need for calibration in automatic mode. The calibration process starts automatically. - **Manual.** The user independently determines the need for calibration based on the quality of the observed image. - **Background.** Close the lens cover before starting the calibration. ● Briefly press **M button** to confirm your selection. The icon in the status bar changes accordingly.
Reticle	**Setting zeroing profile, reticle type and reticle color.** ● Press and hold down the **M (5)** button to enter the Main Menu.

All rights reserved and shall not be copied and distributed in any form without written permission

- Select the **Reticle** menu option with the **Up (6) / Down (4)** button.
- Briefly press of the **M (5)** button to enter the reticle submenu as below.

Zeroing Profile

Select zeroing profile

- Select **Zeroing Profile** option with the **Up (6) / Down (4)** button.
- Briefly press of the **M (5)** button to enter the zeroing profile submenu.
- Select one of three Profiles (marked with the letters A, B, C) with a short press of the **Up (6) / Down (4)** button.
- Briefly press of the **M (5)** button to confirm your selection.
- The name of the selected profile appears in the status bar at the top of the display.

Reticle Type

Select reticle type

- Select **Reticle Type** option with the **Up (6) / Down (4)** button in the reticle submenu.
- Briefly press of the **M (5)** button to enter the **Reticle Type** submenu.
- Select the desired reticle type in the list of seven reticle types with short pressing the **Up (6) / Down (4)** button.
- The reticle types change as the cursor goes down the reticle type list.
- Confirm your selection with a short press of the **M (5)** button.

All rights reserved and shall not be copied and distributed in any form without written permission

<table>
<tr>
<td></td>
<td>Reticle Color</td>
<td>
Select reticle color

Select Reticle Color option with the Up (6) / Down (4) button in the reticle submenu.
Briefly press of the M (5) button to enter the Reticle Color submenu.
Select the desired reticle color among white, black, red and green with short pressing the Up (6) / Down (4) button.
The reticle color changes as the cursor goes down the reticle color list.
Confirm your selection with a short press of the M (5) button.

</td>
</tr>
<tr>
<td rowspan="2">Zeroing</td>
<td colspan="2">
To zero your riflescope, you need to set a zeroing profile and zeroing distance first. Geni LRF Series support the zeroing distance in the range of 1 to 999 m.

Press and hold down the M (5) button to enter the Main Menu.
Select the Zeroing menu option with the Up (6) / Down (4) button.
Briefly press the M (5) button to enter the zeroing submenu (zeroing distance selection).
Select one Zeroing Distance based on the preset target distance with the Up (6) / Down (4) button. The default values are 100m, 200m, 300m
Press M (5) button briefly to enter Zeroing Distance submenu as follows.

</td>
</tr>
<tr>
<td>Zeroing</td>
<td>
If the zeroing distance is the same as the preset distance, you can zero your riflescope directly as follows.

In the Zeroing Distance submenu, select the Zeroing menu option with the Up (6) / Down (4) button.
Press M (5) button briefly to enter Zeroing function interface.

</td>
</tr>
</table>

All rights reserved and shall not be copied and distributed in any form without written permission

		● The X and Y coordinates of the reticle are displayed in the upper left corner of the screen. ● Aim and shoot the target. ● Keep the reticle center the aiming point, then press and hold down the **UP (4)** and **Down (4)** button at the same time until a symbol of freeze ❄ appears on the left of the screen, and the image is frozen. ● Adjust the reticle position with the **Up (6) / Down (4)** button until the reticle matches the point of impact. Briefly press the **Menu (5)** button to switch the movement direction. ● For a detailed description of the reticle adjusting, please refer to the section 9 **Zeroing**. ● Press and hold the **Menu (5)** button to save the position of reticle and exit to the home screen. 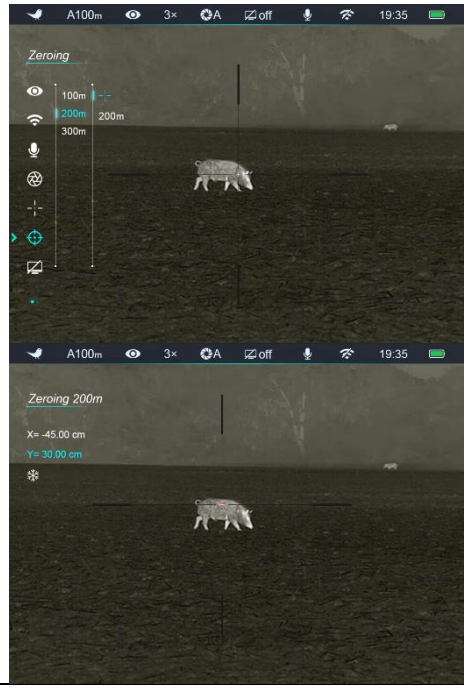
	Reset Zeroing Distance ▼ 000 ▲	If the zeroing distance is not same as the preset object, you can set the distance here. ● Select a **non-primary distance** and enter the submenu for operation with a brief press of the **M (5)** button. ● Select **Reset Zeroing Distance** menu item with the **Up (6) / Down (4)** button. ● Short press the **M (5)** button to enable resetting the zeroing distance. Two triangle icons will appear above

All rights reserved and shall not be copied and distributed in any form without written permission

		and below the number ▼0▲. ● Reset the value of the number from 0 to 9 with the **Up (6) / Down (4)** button. ● Press the **M (5)** button briefly to switch among the three numbers. ● After resetting, press and hold the **M (5)** button to save and exit. ● The new zeroing distance appears in the status bar at the top of the display.
Standby	**Set standby status and time** ● Press and hold down the **M (5)** button to enter the Main Menu. ● Select the **Standby** menu option with the **Up (6) / Down (4)** button. ● Briefly press the **M (5)** button to enter the **Standby** submenu. ● Short press the **Up (6) / Down (4)** button to select one of four options (2min, 4min, 6min, off). ● Confirm your selection with a short press of **M (5)** button and reveal in the status bar at the top of the display. ● If the off is selected, it means the standby mode is turned off.	
Rangefinder Calibration	**Rangefinder Calibration-Calibrate the rangefinder cursor** Generally, the scope will carry out rangefinder calibration before leaving the factory, and there is no need to carry out correction for 1000 times of impact, but if the calibration is needed, you can refer to the following method: ● Press and hold down the **M (5)** button to enter the Main Menu. ● Select the **Rangefinder Calibration** option with the **Up (6) / Down (4)** button.	

All rights reserved and shall not be copied and distributed in any form without written permission

	● If you do not have professional equipment for calibration, find a building 100m away with a great distance between the front and rear (such as a large building in open areas). ● Move the device slowly from left to right so that the building appears in the eyepiece gradually. In the meantime, observe the rangefinder data in the upper right corner. ● When finding the critical point of the rangefinder data changing, such as the point changing from —m to the measured number, press the **Up (6) / Down (4)** button to move the rangefinder cursor left / right to the boundary between the building and the background to complete the calibration of the left and right positions. ● Use the same operation above to complete the calibration of the up and down positions. ● Briefly press of the **M (5) button** to switch the movement direction of the cursor. ● After calibration, press and hold down the **M (5) button** to save and exit to the Main menu.
Pixel Defect Correction	**Calibrate the defective pixels** Defect pixels are pixels that do not change brightness compare with others on the image, they are either brighter or darker than surrounding pixels. Geni LRF Series offer the possibility of removing any defective pixels on the sensor using software, as well as to cancel any deletion. ● Press and hold down the **M (5)** button to enter the Main Menu. ● Select the **Pixel Defect Correction** menu option with the **Up (6) / Down (4)** button. ● Briefly press the **M (5)** button to enter the **Pixel Defect Correction** interface. ● A small cross cursor instead of the reticle will appear on the center of the screen.

All rights reserved and shall not be copied and distributed in any form without written permission

- The Picture in Picture (PIP) window will appear on the lower left corner of the screen.
- On the right of PIP window, there are some prompts showing the movement direction of the cursor in X-axis (horizontal), Y-axis (vertical) and number of corrected pixels.
- Move the cursor to align with the defective pixel with a short or long press the **Up (6) / Down (4)** button. Press the **Up (6)** button to move the reticle right or up and the **Down (4)** button to move the reticle left or down. Short press to move one pixel every time and long press to move ten pixels once.
- Press the **M (5)** button briefly to switch the direction between X-axis and Y-axis.
- Delete the defective pixel with a short press of the **Power (7)** button When the pixel has been successful deleted, the **Add** message will appear on the PIP window for a short time.
- Then, delete the next defective pixel by moving the cursor across the display.
- Press the **Power (7)** button briefly in the same position as the calibrated defective pixel to cancel the pixel correction, and the Del message will appear on the PIP window for a short time. But it is only limited to not exiting this correction.
- The amount of defect pixels changes each time adding or deleting pixels correction.
- The PIP and the prompt information will move to the upper left of the screen when cursor moves near the lower left corner.
- Press and hold the **M (5)** button until display shows “Do you want to save these settings?” and “Yes” and “No” options.

All rights reserved and shall not be copied and distributed in any form without written permission

<table>
<tr><td></td><td colspan="2">

- Press the **Up (6) / Down (4)** button briefly to select ‘Yes’ to save and exit, or select ‘No’ to cancel saving and exit.
- Confirm your selection with a short press of **M (5)** button.
- If **Yes** is selected, a **5-second Saving** countdown appears on the screen. It will exit to the home screen after the prompt **Saved successful** appears.

</td></tr>
<tr><td rowspan="2">Settings</td><td colspan="2">Select general settings

- Press and hold down the **M (5)** button to enter the Main Menu.
- Select the **Settings** menu option with the **Up (6) / Down (4)** button.
- Briefly press the **M (5)** button to enter the submenu.
- This menu item allows you to configure the following settings.

</td></tr>
<tr><td>Date</td><td>

Date setting

- In the **Settings** submenu, briefly press the **M (5)** button to active the **Date** submenu. Two triangle icons will appear above and below the value.
- Date format is displayed as **YY.MM.DD** format (2020.01.01).
- Select the correct value for the year, month and date with a short press of the **Up (6) / Down (4)** button.
- Switch between digits with a short press of the **M (5)** button.
- Save selected date and exit the submenu with a long press of the **M (5)** button.

</td></tr>
</table>

All rights reserved and shall not be copied and distributed in any form without written permission

	Time	**Time setting** ● In the **Settings** submenu, briefly press the **M (5)** button to active the **Time** submenu. Two triangle icons will appear above and below the value. ● Time format is displayed as **HH:MM** in 24-hours format (14:48). ● Select the correct value for the hour and minute with a short press of the **Up (6) / Down (4)** button. ● Switch between digits with a short press of the **M (5)** button. ● Save selected date and exit the submenu with a long press of the **M (5)** button.
	Languages	**Language selection** ● In the **Settings** submenu, select the **Languages** menu option with the **Up (6) / Down (4)** button. ● Enter the **Languages** submenu with a short press of the **M (5)** button. ● Select the desired language with a short press of the **Up (6) / Down (4)** button. ● Confirm your selection with a short press of the **M (5)** button. ● Submenu exit will take place automatically.
	Unit	**Units of measurement selection** ● In the **Settings** submenu, select the **Unit** menu option with the **Up (6) / Down (4)** button.

All rights reserved and shall not be copied and distributed in any form without written permission

		● Enter the **Unit** submenu with a short press of the **M (5)** button. ● Select the desired unit between meter and yard with a short press of the **Up (6) / Down (4)** button. ● Confirm your selection with a short press of the **M (5)** button. ● Submenu exit will take place automatically.
	Status Bar	**Set status bar to show or hide** ● In the **Settings** submenu, select the **Status Bar** menu option with the **Up (6) / Down (4)** button. ● Enter the **Status Bar** submenu with a short press of the **M (5)** button. ● Briefly press the **Up (6) / Down (4)** button to select **Hide** or **Show**. ● Confirm your selection with a short press of the **M (5)** button. ● Submenu exit will take place automatically.
	Factory Reset	**Reset to Factory Settings** ● In the **Settings** submenu, select the **Factory Reset** menu option with the **Up (6) / Down (4)** button. ● Enter the **Factory Reset** submenu with a short press of the **M (5)** button. ● Briefly press the **Up (6) / Down (4)** button to select **Yes** or **No**.

All rights reserved and shall not be copied and distributed in any form without written permission

		● Confirm your selection with a short press of the **M (5)** button. ● The riflescope will reboot If **Yes** is selected. ● If **No** is selected, the action will be cancelled and will return to the submenu. The following settings will be returned to the defaults: - **Image mode:** White Hot - **Zeroing:** A100 - **Ultraclear mode:** Off - **Magnification:** 3.0x - **Calibration mode:** Automatic - **Wi-Fi:** Off - **Standby:** Off - **Language:** English - **Units of Measure:** Meter - **Status Auto Hiding:** Off
	Info	**Show device information** ● In the **Settings** submenu, select the **Info** menu option with the **Up (6) / Down (4)** button. ● The relevant information of riflescope will be shown by a short press of the **M (5)** button. ● This item allows the user to view the following information about the riflescope: the product model, GUI version, SYS Info, Boot version, FPGA, PN and SN number of the riflescope, Hardware version. ● Press and hold the **M (5)** button to return to the submenu.

All rights reserved and shall not be copied and distributed in any form without written permission

17 PIP Function

The PIP (Picture in Picture) function allows you to see both a magnified image in a particular window and the main image.

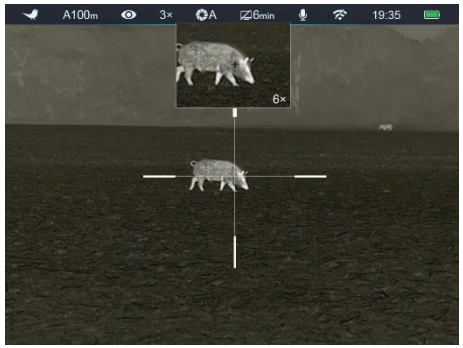

- Press the **Zoom (6) + M (5)** buttons in the home screen to switch the PIP function on /off.
- When the main image is enlarged with a short press of the **Zoom (6)** button, the PIP image will be enlarged 2× synchronously.
- For example, when the magnification of the main image is 3×, 6×, 9×, 12×, the corresponding magnification of the PIP image is 6×, 12×, 18×, 24×.

18 Status Bar

This function enables to show or hide the GUI information in the interface other than the reticle, so to make the image unobtrusive.

- Press and hold down the **M (5)** button to enter the Main Menu.
- Select the **Settings** menu option with the **Up (6) / Down (4)** button.
- Briefly press the **M (5)** button to enter the submenu.
- Select the **Status Bar** menu option with the **Up (6) / Down (4)** button.
- Enter the **Status Bar** submenu with a short press of the **M (5)** button.
- Briefly press the **Up (6) / Down (4)** button to select **Hide** or **Show**.
- Confirm your selection with a short press of the **M (5)** button.
- When the selecting is **Hide**, the GUI icons in the interface including the status bar will be automatic hidden after 8 seconds without any operation. Only the image and the reticle will be displayed.
- The GUI information will be displayed again with the press of any button.
- Only after the GUI is displayed, the button and menu can be manipulated.

19 Wi-Fi Function

Geni LRF Series Is built-in Wi-Fi module for wireless communication with mobile devices (smartphone or tablet).

All rights reserved and shall not be copied and distributed in any form without written permission

- Press and hold down the **M (5)** button to enter the Main Menu.
- Select the **Wi-Fi** menu option with the **Up (6) / Down (4)** button.
- Turn Wi-Fi function on /off with a short press of **M (5)** button.
- The riflescope is recognized by an external device under the name "Geni_xxxxx-xxxxxx", xxxxx-xxxxxx is the SN code of the device that consist of numbers and letters.
- Select this Wi-Fi signal, and enter the password (default is 12345678) on the mobile to set up the connection.
- When Wi-Fi is successfully connected, users can manipulate the device via App.
- Launch **InfiRay Outdoor** application on your mobile device (see **Update and APP** section).

Set Wi-Fi Name and Password

The Wi-Fi name and password of Tube series can be reset in the **InfiRay Outdoor** application.

- After connected with the mobile device, find and click the **"Setting"** icon ⚙ in the **InfiRay Outdoor** to enter the setting interface.
- In the text box, enter and submit the new name (SSID) and password of the Wi-Fi.
- It needs to reboot the device to take the new name and password effect.

Note! When factory Settings are restored, the Wi-Fi name and password are also restored to factory default settings.

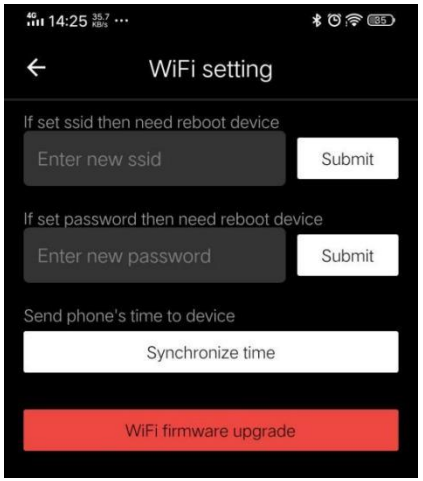

20 Updates and InfiRay Outdoor

Geni LRF series thermal imaging riflescopes support **InfiRay Outdoor** technology, which allows you to transmit the image from the thermal imager to the smartphone or tablet via Wi-Fi in real time mode.

You can find detailed instructions on **InfiRay Outdoor** in the separate brochure at the site

The design of the riflescope provides the software update option. Updating is possible via the **InfiRay Outdoor** application. Also, it is feasible to download and update software from the official website:

All rights reserved and shall not be copied and distributed in any form without written permission

About InfiRay Outdoor

- You can download and install the InfiRay Outdoor App on the official website or the app store. Alternatively, you can scan the QR code below to download it for free.

- When installation completed, open InfiRay Outdoor application.
- If your riflescope is already connected with mobile device, please switch on the mobile data in mobile device. After connection, the update detection is performed automatically with a prompt in the application. Click 'Now' to download the updates or click 'Later' to update later.
- **InfiRay Outdoor** will automatically store the last connected device. So, if the riflescope has not connected with your mobile device, but linked to **InfiRay Outdoor** before, the update prompt will appear if there is an update when turning on **InfiRay Outdoor.** You can download the update first via mobile Wi-Fi and then connect the riflescope with mobile device to finish the update.
- After finishing the update, the device will root.
- Instructions for using InfiRay Outdoor can also be downloaded from the official website.

21 Technical Inspection

It is recommended to carry out a technical inspection each time before using the riflescope. Check the following:

- Check the external appearance of the device (there should be no cracks on the body).
- Check the condition of the lens and eyepiece (there should be no cracks, greasy spots, dirt or other deposits).
- Check the state of rechargeable battery (it should be charged).
- Check the controls/buttons (there should be in working order).

All rights reserved and shall not be copied and distributed in any form without written permission

22 Maintenance

The maintenance should be carried out at least twice a year and includes the following steps:

- Wipe the external surface of metal and plastic parts off dust with a cotton cloth. Silicone grease may be used for cleaning process.
- Clean the electric contacts and battery slots on the riflescope using a non-greasy organic solvent.
- Check the optics of the lens and the eyepiece. If necessary, remove the dirt and sand from the optics (it is perfect to use a non-contact method). Cleaning of the exterior of the optics should be done with cleaners designed especially for this purpose.

23 Trouble Shooting

The table lists all the problems that may occur when operating the riflescope. Carry out the recommended checks and troubleshooting steps in the order shown in the table. If there are defects that are not listed in the table or it is impossible to repair the defect yourself, return the riflescope for repair service.

Fault	**Probable Cause**	**Solution**
Riflescope will not turn on.	Batteries are completely discharged.	Charge the battery.
Riflescope will not work with an external power supply.	USB cable is damaged.	Replace USB cable.
	External power source is discharged.	Check the external power source.
The image is fuzzy, not clear, not balanced, with strings	Calibration is required.	Perform image calibration according to the **Calibration** section of this manual.
The Image is too dark.	Brightness level is too low.	Adjust brightness of screen.

All rights reserved and shall not be copied and distributed in any form without written permission

The GUI is clear, but the image is fuzzy.	The lens is not focused.	Adjust the image sharpness by rotating the lens adjuster.
	There is dust or condensate on the interior or exterior optical surfaces of the lens.	Wipe off the outside optical surfaces with a soft cotton cloth. Let the riflescope dry by leaving it in a warm environment for 4 hours.
The aiming reticle shifts after firing rounds.	The riflescope is not mounted securely or the mount is not fixed on the riflescope.	Check that the riflescope has been securely mounted. Make sure you are using the same type and caliber of the bullets as when the riflescope and weapon were initially zeroed. If your riflescope was zeroed in the summer and using in the winter (or the other way round), a slight shift of the zero point is possible.
The image of the object being observed is missing.	Observation through glass.	Remove the glass from the field of vision.
The riflescope will not focus.	Wrong settings.	Adjust the riflescope according to the **Powering On and Image Setting** section. Check the outer surfaces of the objective lenses and eyepiece and, where necessary, wipe them from dust, condensation, frost, etc. In cold weather, you can use special anti-fogging coatings (e.g., the same as for corrective glasses).
The riflescope can’t connect with the smartphone and tablet PC.	Wrong Wi-Fi password	Input correct password
	Too many Wi-Fi signals around the device.	Move the device to an area with no or fewer Wi-Fi signals
Wi-Fi signal is missing or	Smartphone or tablet is out of range of a	Replace the device until Wi-Fi signal is stable.

All rights reserved and shall not be copied and distributed in any form without written permission

interrupted	strong Wi-Fi signal. Or there are obstacles between device and the smartphone or tablet (such as concrete wall).	
Image quality is too low or the detection range is reduced.	These problems may occur due to the weather condition, such as snow, rain, fog etc.	
When the riflescope is used in the low temperature conditions, the image quality of the surroundings is worse than in positive temperature conditions.	In positive temperature conditions, objects being observed (surroundings and background) heat up differently because of thermal conductivity, thereby generating a high temperature contrast. Accordingly, image quality produced by the thermal imager will be higher. In low temperature conditions, object objects being observed (background) will cool down to roughly the same temperature, as a rule, and thus the temperature contrast is substantially reduced and image quality (zoom) goes down. This is a distinctive feature of the thermal imager.	

All rights reserved and shall not be copied and distributed in any form without written permission

24 Legal and Regulatory Information

Wireless transmitter module frequency range:

WLAN: 2.412-2.472GHz

Wireless transmitter module power < 20dBm

We hereby declare that radio equipment Geni LTF series is in compliance with the Directives 2014/53/EU and 2011/65/EU

FCC Statement

FCC ID: 2AYGT-2H-00

Labeling requirements

This device complies with part 15 of the FCC Rules. Operation is subject to the following two conditions: (1) This device may not cause harmful interference, and (2) this device must accept any interference received, including interference that may cause undesired operation.

Information to the user

Any Changes or modifications not expressly approved by the party responsible for compliance could void the user's authority to operate the equipment.

EMC: Class A

Note: This equipment has been tested and found to comply with the limits for a Class A digital device, pursuant to part 15 of the FCC Rules. These limits are designed to provide reasonable protection against harmful interference when the equipment is operated in a commercial environment. This equipment generates, uses, and can radiate radio frequency energy and, if not installed and used in accordance with the instruction manual, may cause harmful interference to radio communications. Operation of this equipment in a residential area is likely to cause harmful interference in which case the user will be required to correct the interference at his own expense.

To comply with RF exposure requirements, a minimum separation distance of 0.00 cm must be maintained between the user’s body and the handset, including the antenna.

Laser Warning

All rights reserved and shall not be copied and distributed in any form without written permission

Information for the user

Telescopes and binoculars may pose an eye hazard and thus the user should not direct the beam into an area where such instruments are likely to be used.

Wavelength: 905nm typical
Pulse duration: 20ns
Frequency: 5000Hz
Standard: EN 60825-1:2014/A11:2021

All rights reserved and shall not be copied and distributed in any form without written permission